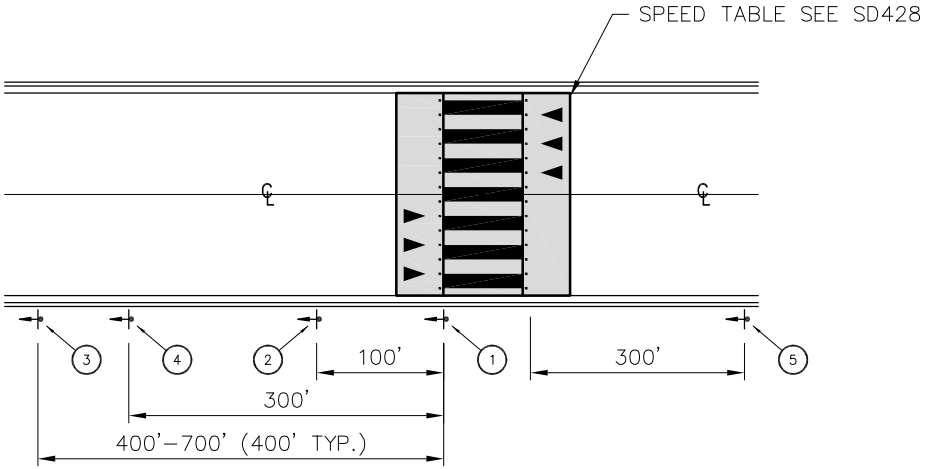

WITHIN SCHOOL SPEED ZONE

NO SCALE

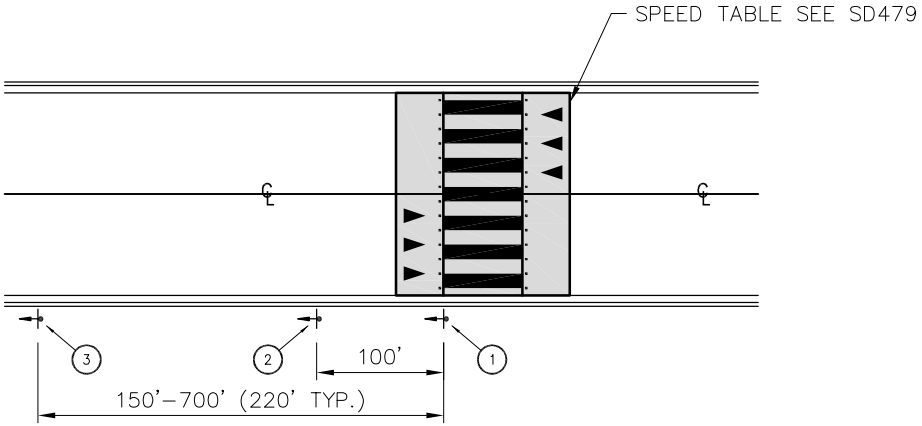

OUTSIDE SCHOOL SPEED ZONE

NO SCALE

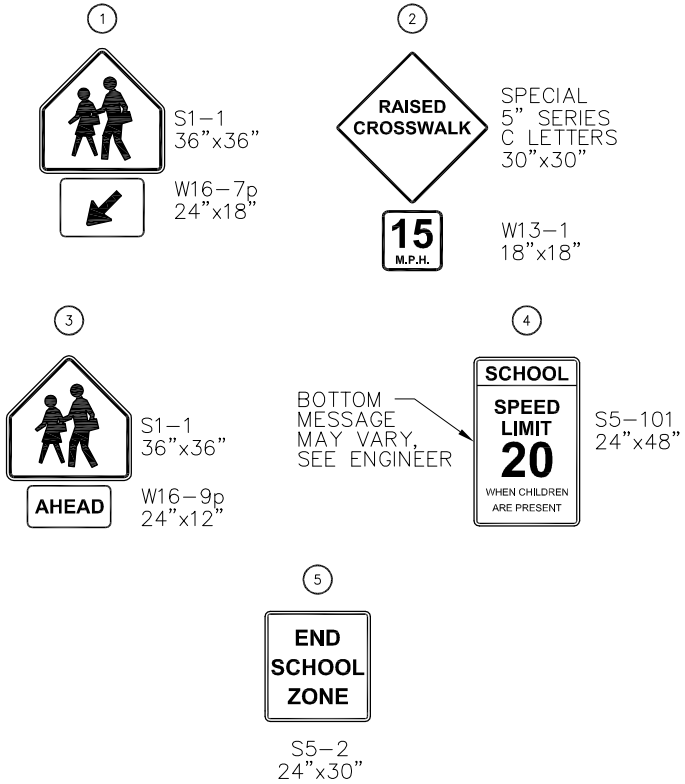

NOTES:

1. SIGNS (1), (2), (3), & THE "SCHOOL" LEGEND ON (4) TO HAVE FLUORESCENT YELLOW–GREEN BACKGROUND WITH BLACK LEGEND AND BORDER.
2. DIAGONAL ARROW POINTING DOWNWARD TO CROSSWALK.
3. SIGN (1): INSTALL TWO SIGNS BACK TO BACK ON SAME POST.

SIGN DETAIL

NO SCALE

APPROVED: WILLIAM J. CAMPBELL

REV. DATE: JULY 1, 2007

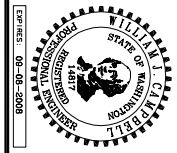

STANDARD DETAILS

RAISED SCHOOL CROSSWALK SIGNING

FILE SD480

DRAWING NO. **480**