NOTES:

1. CASTINGS SHALL BE GRAY IRON ASTM A-48, CLASS 40.
2. COVER SEAT SHALL BE MACHINED FOR PERFECT CONTACT AROUND CIRCUMFERENCE AND FULL WIDTH OF BEARING SURFACE.
3. APPROXIMATE WEIGHTS STANDARD:
   CASE 60 LBS.
   COVER 19 LBS.
   TOTAL 79 LBS.
4. ASPHALT CONCRETE OR APPROVED SUBSTITUTE.
5. CONCRETE SHALL BE CLASS A.
6. BRASS CAP 2" DIA. MINIMUM.
7. IF MONUMENT IS LOCATED IN A SOFT AREA, INSTALL A 2' X 2' 4" THICK, CONCRETE PAD WITH CL. 3000 CONCRETE.

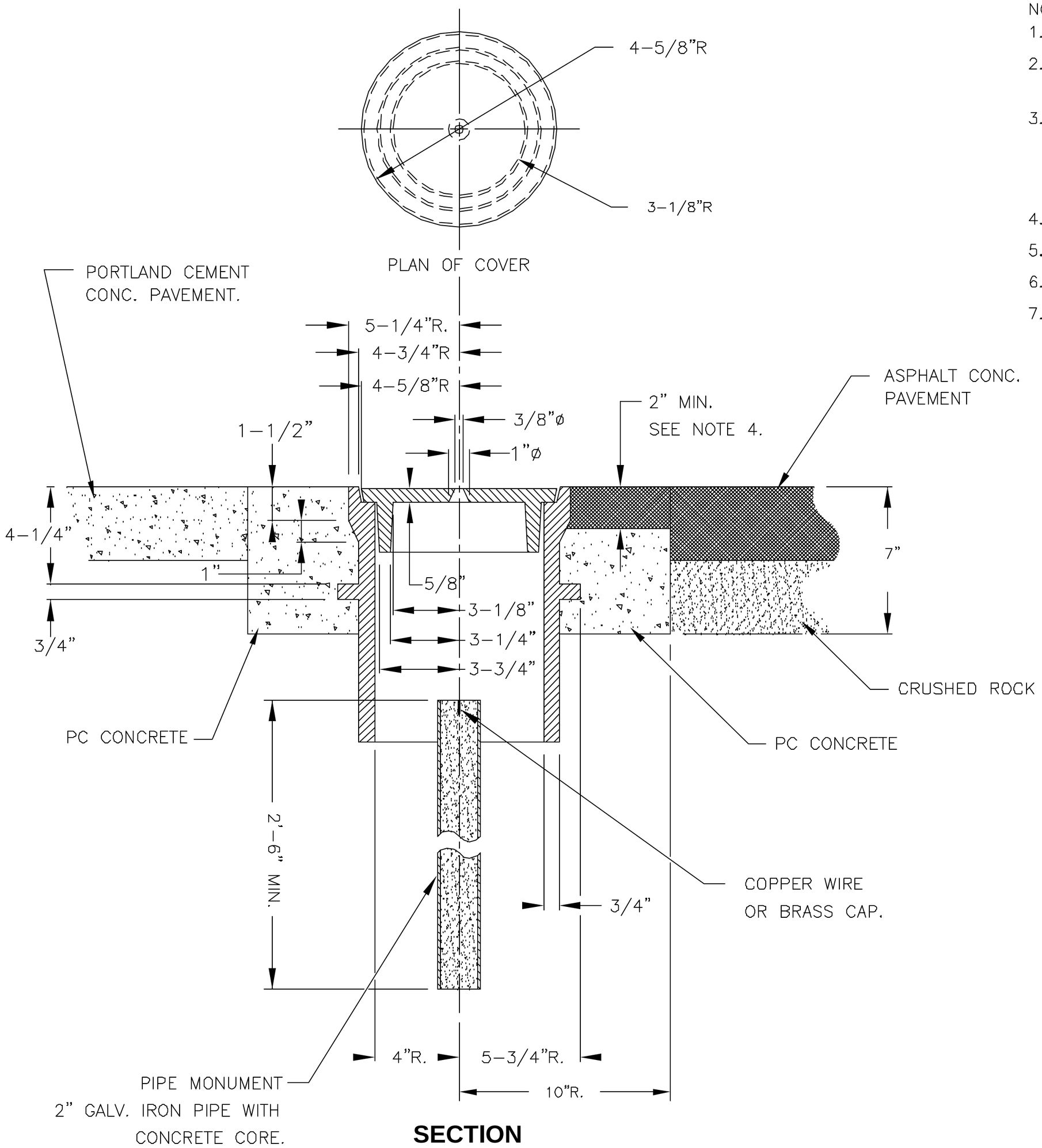

SECTION

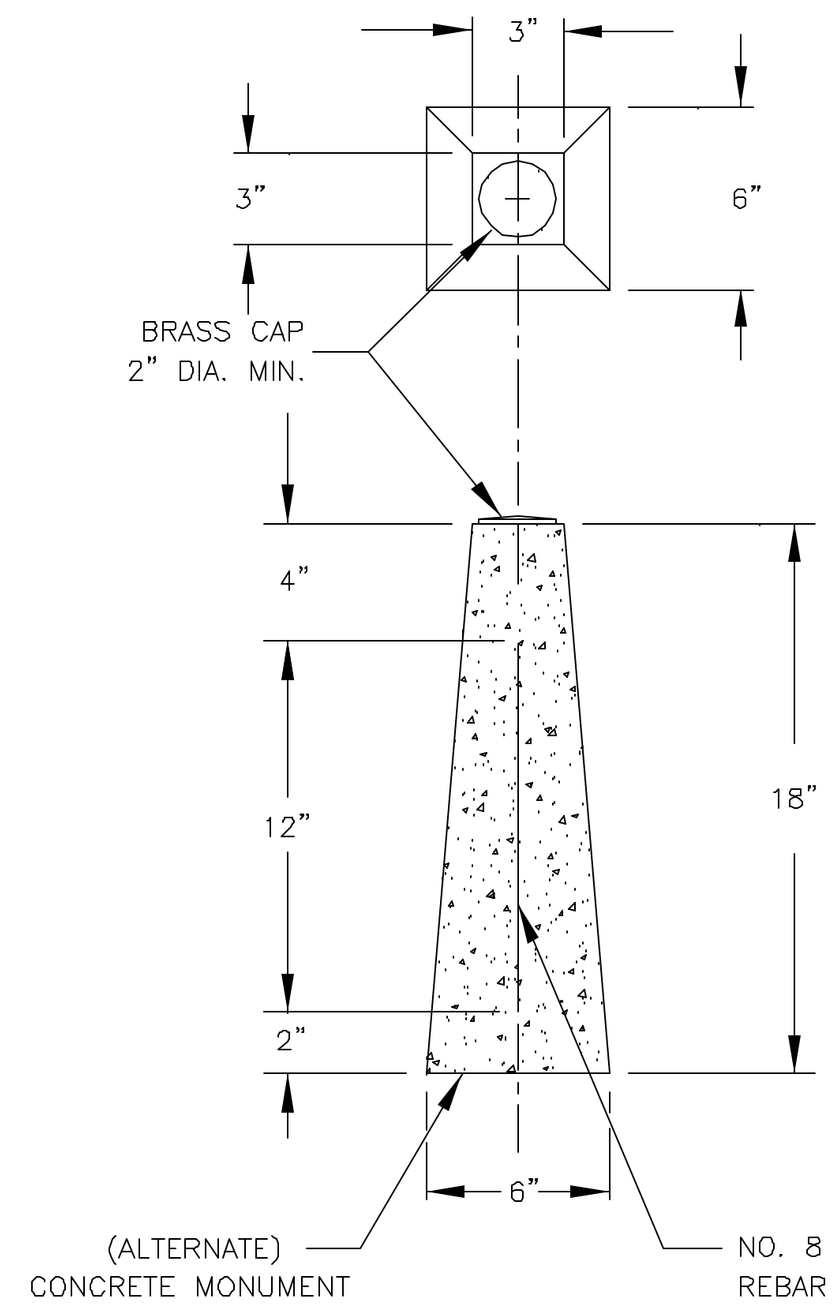

OFF ROAD SURVEY MONUMENT

SURVEY MONUMENT CASE AND COVER

NO SCALE

APPROVED: WILLIAM J. CAMPBELL

REV. DATE: MARCH 03, 2008

WILLIAM J. CAMPBELL — STATE OF WASHINGTON — 14817 — REGISTERED PROFESSIONAL ENGINEER — EXPIRES: 09-08-1998

City of Redmond WASHINGTON

STANDARD DETAILS

SURVEY MONUMENT CASE AND COVER

FILE	DRAWING NO.
SD903.DWG	903