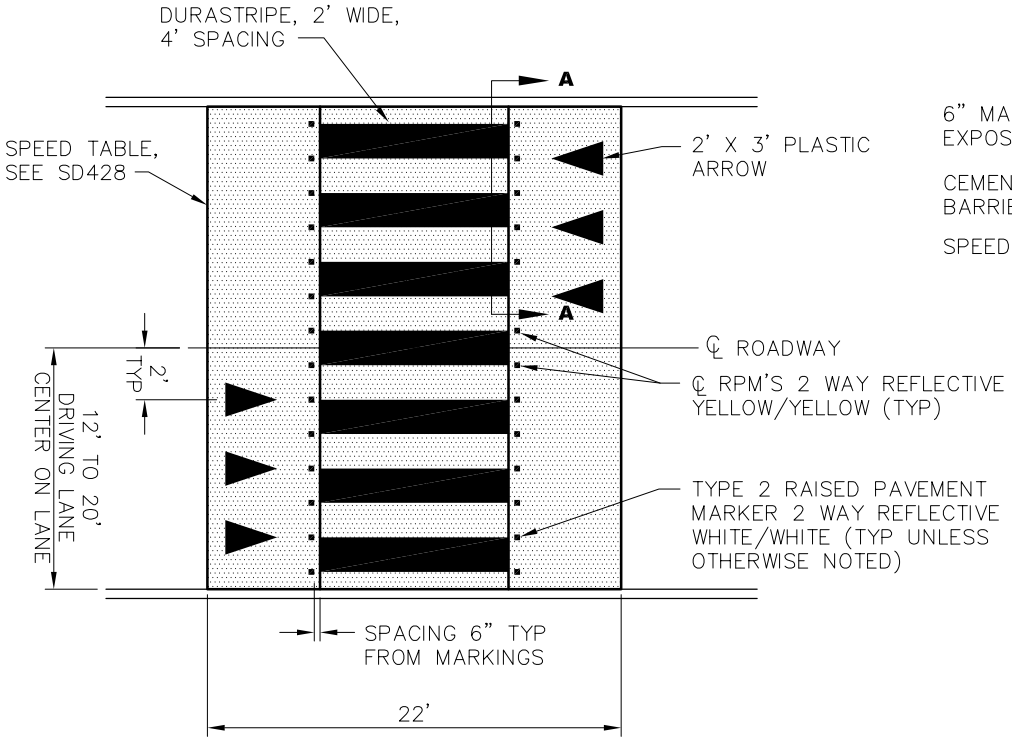

MARKING DETAIL

NO SCALE

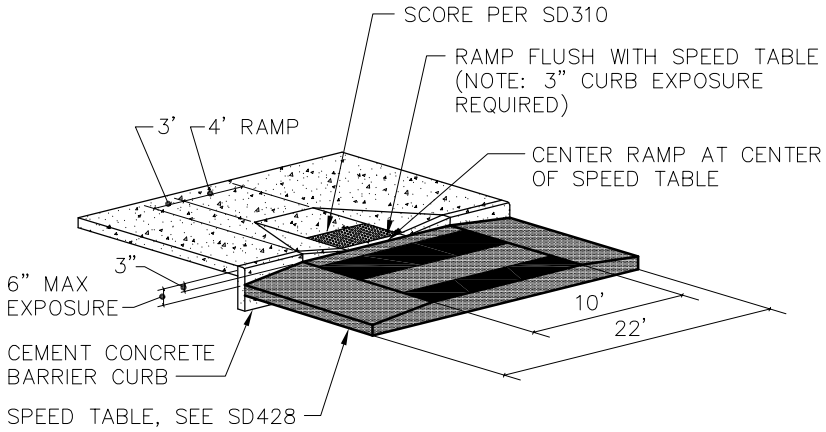

TRANSITION FROM TYPE 1 CURB RAMP TO RAISED CROSSWALK

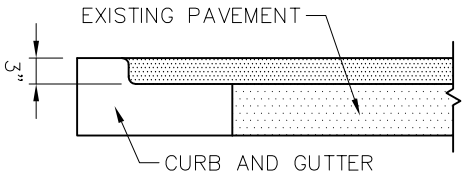

SECTION A-A

NO SCALE

APPROVED: WILLIAM J. CAMPBELL

REV. DATE: JULY 1, 2007

EXPIRES: 09-08-2008

City of Redmond

STANDARD DETAILS

RAISED CROSSWALK

FILE SD479

DRAWING NO. **479**