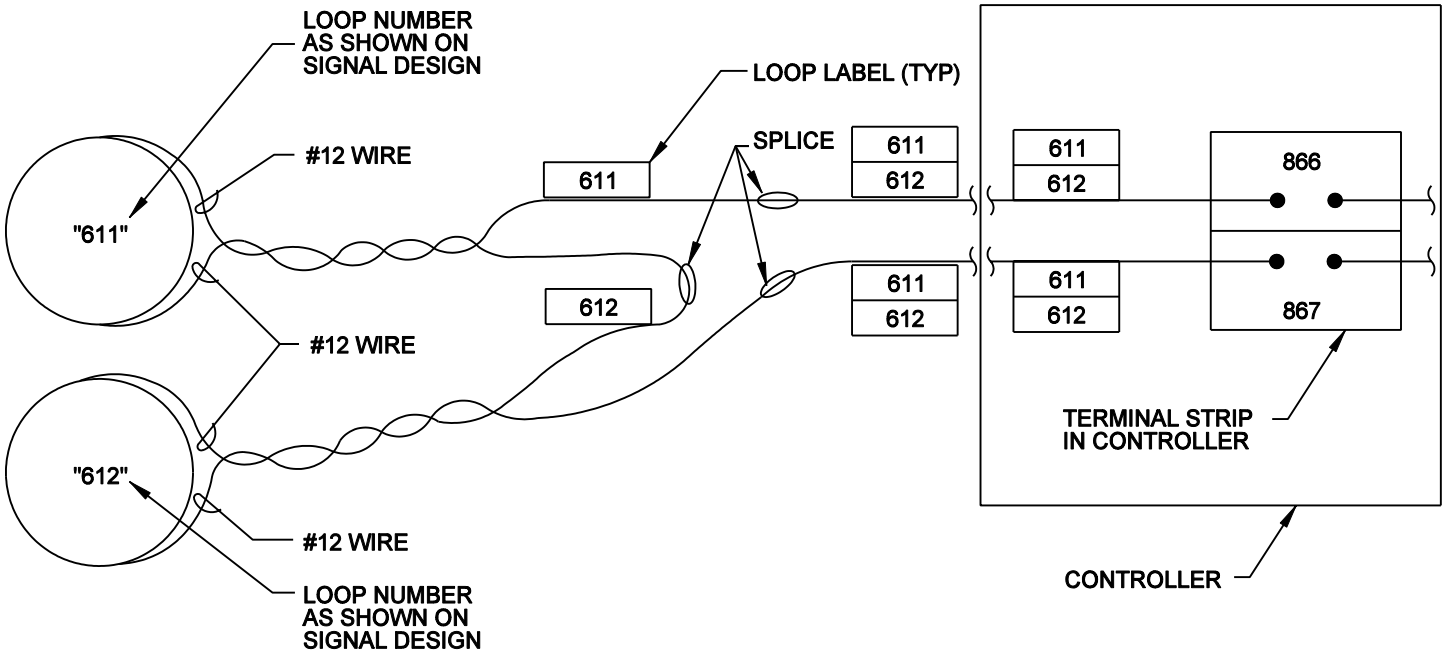

LOOP WIRE LABELLING DETAIL

NO SCALE

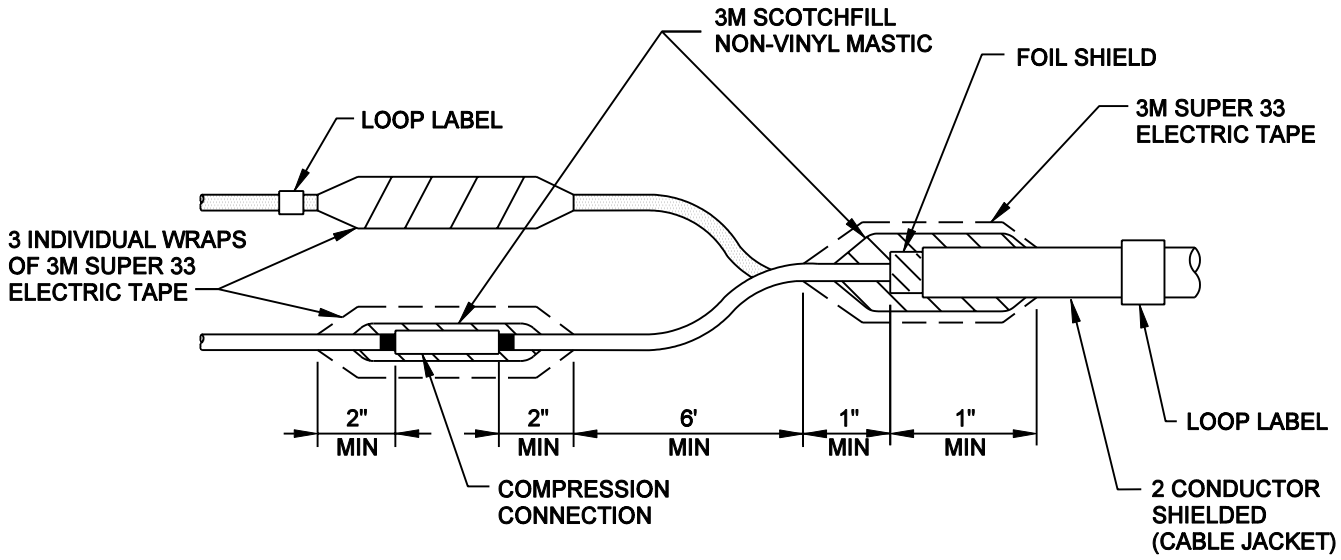

LOOP SPLICE DETAIL

NO SCALE

APPROVED: DON CAIRNS	WILLIAM J. CAMPBELL, STATE OF WASHINGTON, 14817, REGISTERED PROFESSIONAL ENGINEER, EXPIRES: 09-08-2006	THE CITY OF REDMOND WASHINGTON	STANDARD DETAILS
REV. DATE: NOVEMBER 01, 2005			LOOP DETECTOR SPLICE AND WIRING LABELLING
TRANSPORTATION DIVISION			FILE SD455.DGN · DRAWING NO. 457