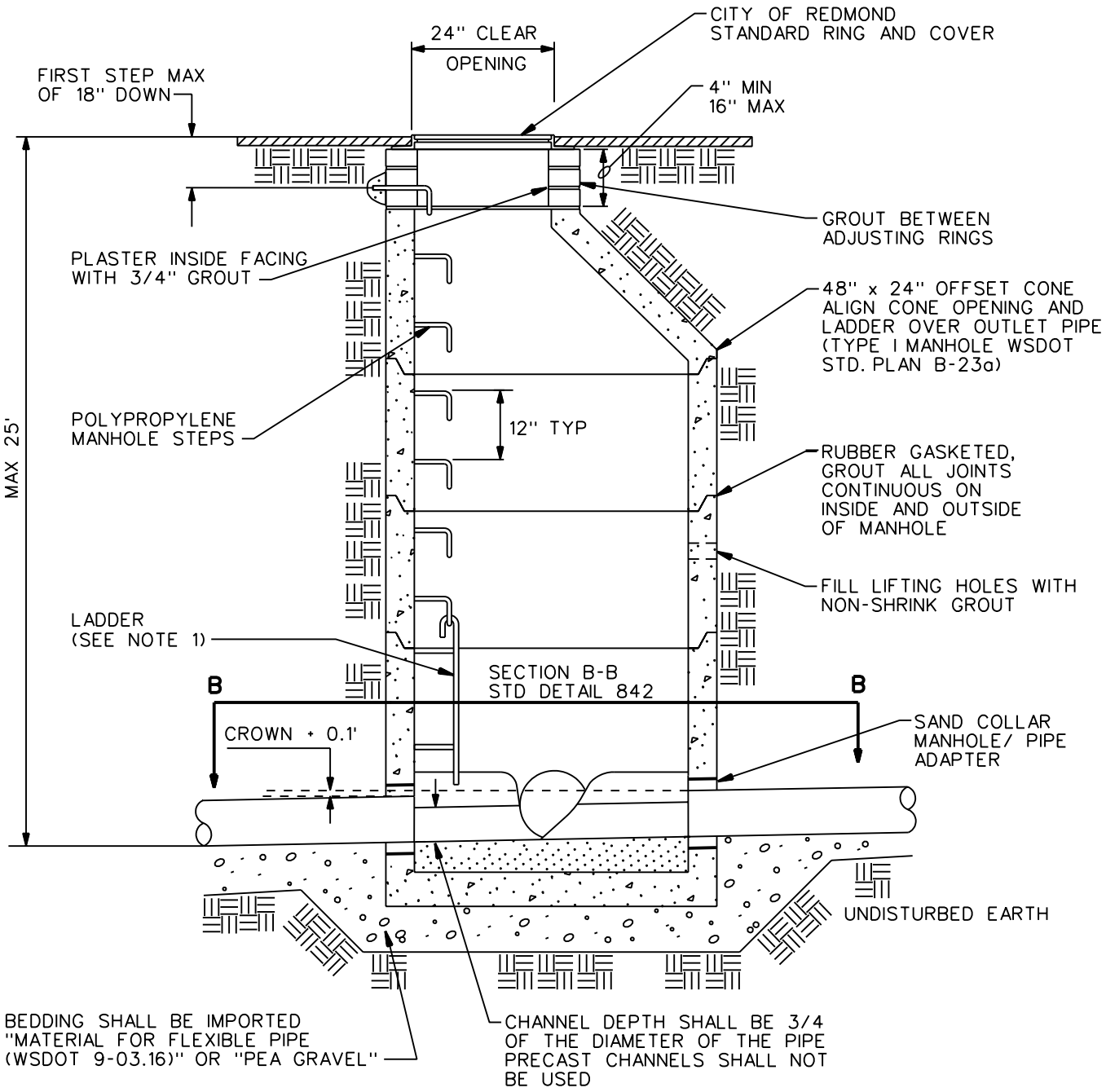

48" STANDARD MANHOLE

NOT TO SCALE

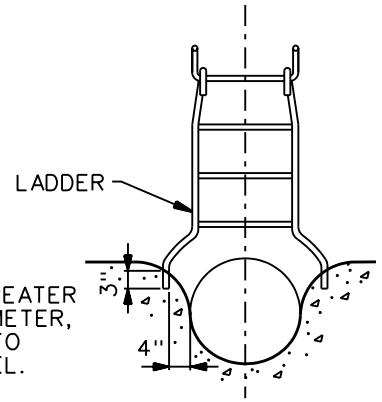

NOTE:

1. FOR PIPE SIZE GREATER THAN 8 INCH DIAMETER, SPREAD LADDER TO STRADDLE CHANNEL.

APPROVED: SCOTT THOMASSON	WILLIAM J. CAMPBELL STATE OF WASHINGTON 14817 REGISTERED PROFESSIONAL ENGINEER EXPIRES: 9-08-1993	THE CITY OF REDMOND WASHINGTON	STANDARD DETAILS
REV. DATE: NOV 01, 2005			**48" STANDARD MANHOLE**
WATER/WASTEWATER DIVISION			FILE SD840.DGN DRAWING NO. **840**