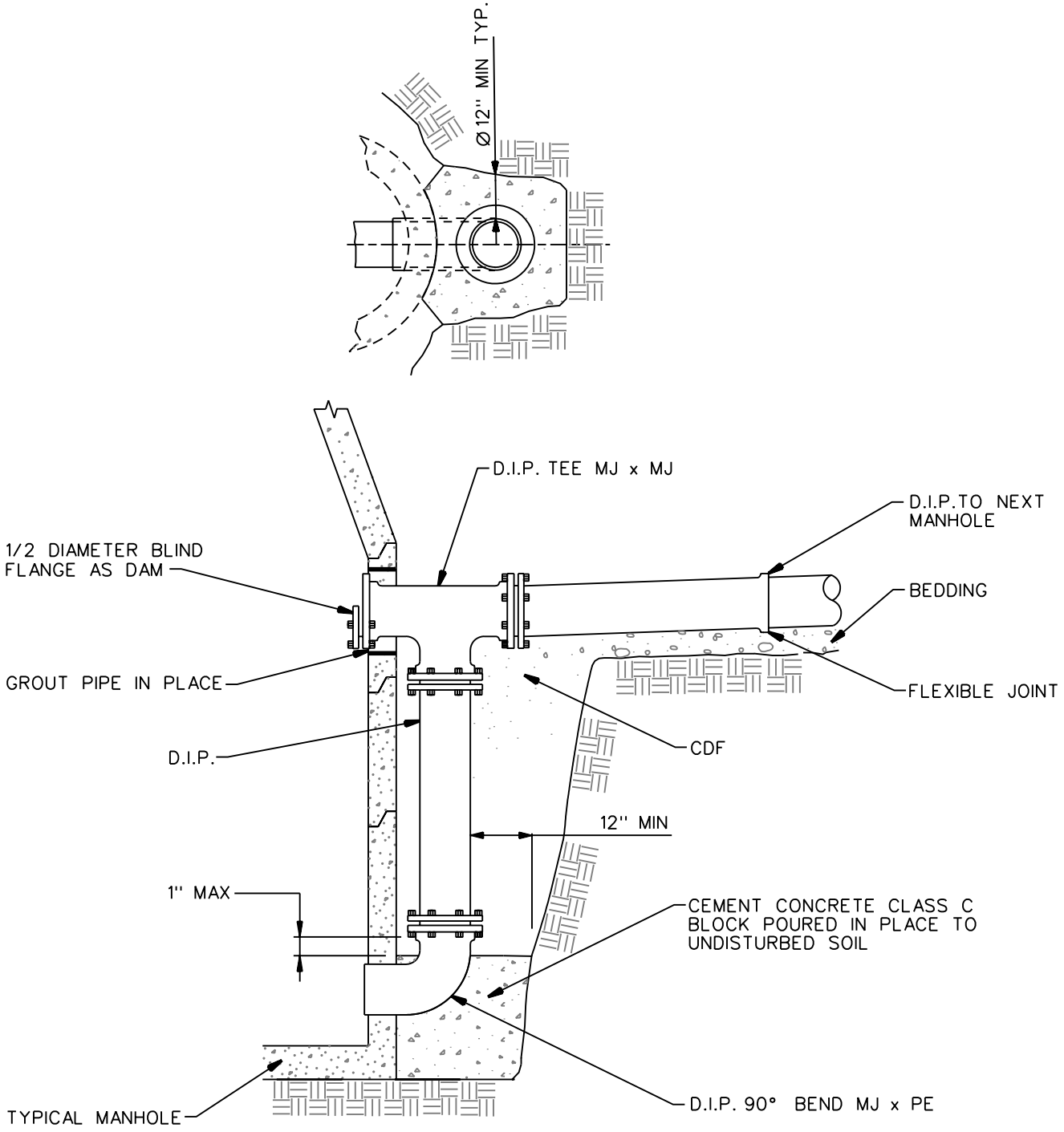

DROP CONNECTION DETAIL

NOT TO SCALE

APPROVED: SCOTT THOMASSON	WILLIAM J. CAMPBELL STATE OF WASHINGTON 14817 REGISTERED PROFESSIONAL ENGINEER EXPIRES: 9-08-1993	THE CITY OF REDMOND WASHINGTON	STANDARD DETAILS
REV. DATE: FEB. 1, 1997			**DROP CONNECTION**
WATER/WASTEWATER DIVISION			FILE WWDT820.DGN DRAWING NO. **820**