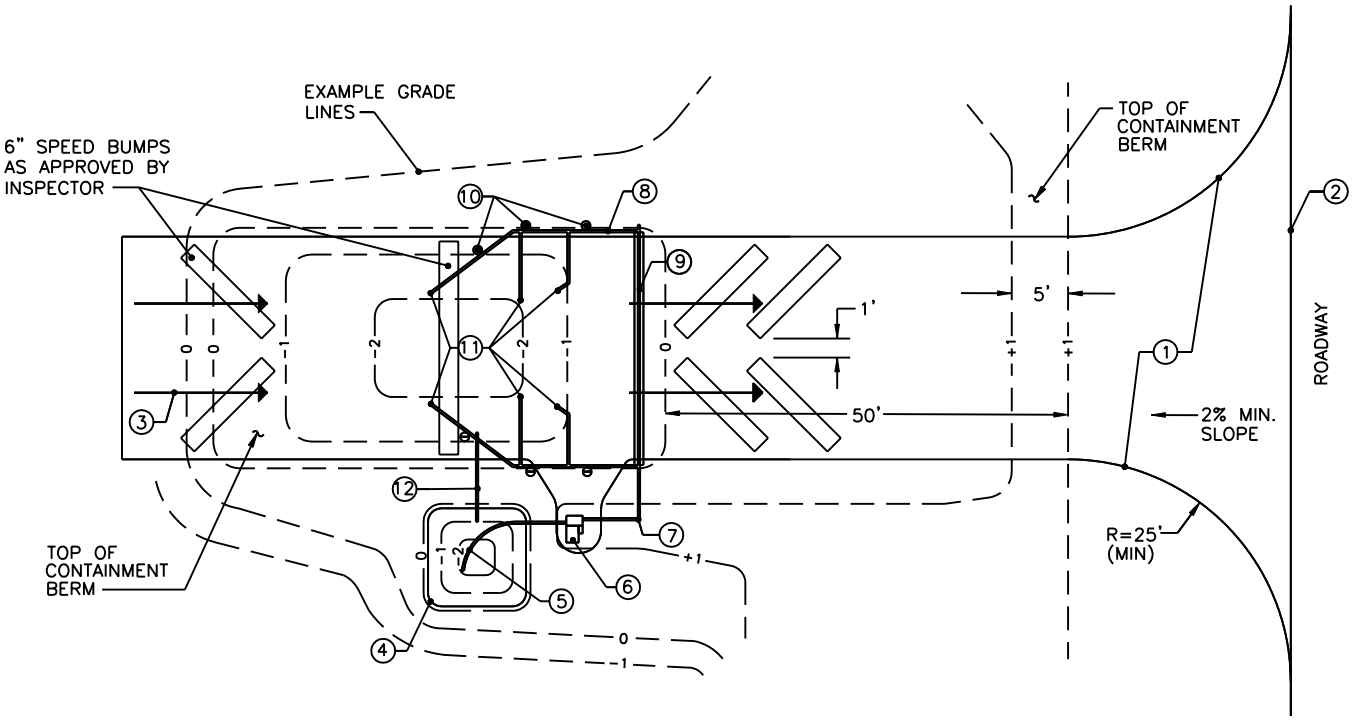

PAVED CONSTRUCTION EXIT

NO SCALE

LEGEND

1. TEMPORARY CONSTRUCTION EXIT 25'Wx100'L. 2" A.C. OVER 2" CRUSHED ROCK OVER 8" QUARRY SPALLS.
2. EXIST. EDGE OF PAVEMENT
3. 8"x15' ORANGE PAINT STRIPE (TYP.) TO DIRECT TRAFFIC THROUGH WASH AREA.
4. 10'x10'x3' DEEP SUMP. LINE SUMP WITH 12 MIL. SHEET PLASTIC.
5. 3" FLEXIBLE SUCTION LIN. SUSPEND INTAKE END 6" BELOW DESIGN WATER SURFACE.
6. GAS POWERED LINE PUMP (3" DISCHARGE).
7. 2" DIA. PVC OR P.E. PIPE (PUMP DISCHARGE LINE). CONNECT TO PUMP WITH TRANSITION COUPLING.
8. 2" DIA. PVC OR P.E. PIPE (SPRAY MANIFOLD). ELEVATE 2' ABOVE GRADE. SUPPORT MANIFOLD AND SPRAY ARMS WITH METAL STAKES.
9. 6" DIA. HEAVY WALL PVC CASING UNDER CONSTRUCTION EXIT PAVEMENT. PROVIDE 12" MIN. COVER. (SLEEVE DISCHARGE LINE THROUGH CASING)
10. STEEL SUPPORT STAKE (TYP.) EACH SIDE.
11. SPRAY NOZZLE FORMED BY DRILLING THREE 1/4" DIA. HOLES IN END OF 2" PVC CAP. SET TO SPRAY TRUCK WHEELS AND UNDERSIDE.
12. 6" DIA. PVC DRAIN LINE. (DRAIN WASH AREA INTO SUMP, MAINTAINS 12" OF WATER DURING RECIRCULATION)

NOTES

1. USE SOLVENT – GLUED JOINTS AND FITTINGS IN PUMP DISCHARGE LINE/SPRAY MANIFOLD.
2. PAINT OUTER 2" OF SPRAY ARM ENDS WITH ORANGE WARNING PAINT.
3. FILL TRUCK WASH AND SUMP AREAS WITH CLEAN WATER TO DESIGN OPERATING DEPTH. SUPPLEMENT AS NECESSARY.
4. WASH WATER TO BE DISCHARGED TO SANITARY SEWER OR OTHER APPROVED WASTE DISCHARGE.

APPROVED: MICHAEL K. HALEY	WILLIAM J. CAMPBELL, STATE OF WASHINGTON, 14817, REGISTERED PROFESSIONAL ENGINEER, EXPIRES: 09-08-1998	THE CITY OF REDMOND, WASHINGTON	STANDARD DETAILS
REV. DATE: JUNE 7, 2000			**PAVED CONSTRUCTION EXIT**
STORMWATER ENGINEERING			FILE 503A.DWG / DRAWING NO. **503A**