SEMINOLE SPEED HUMP DETAIL (2 OF 2)

SPEED HUMP SECTION A-A

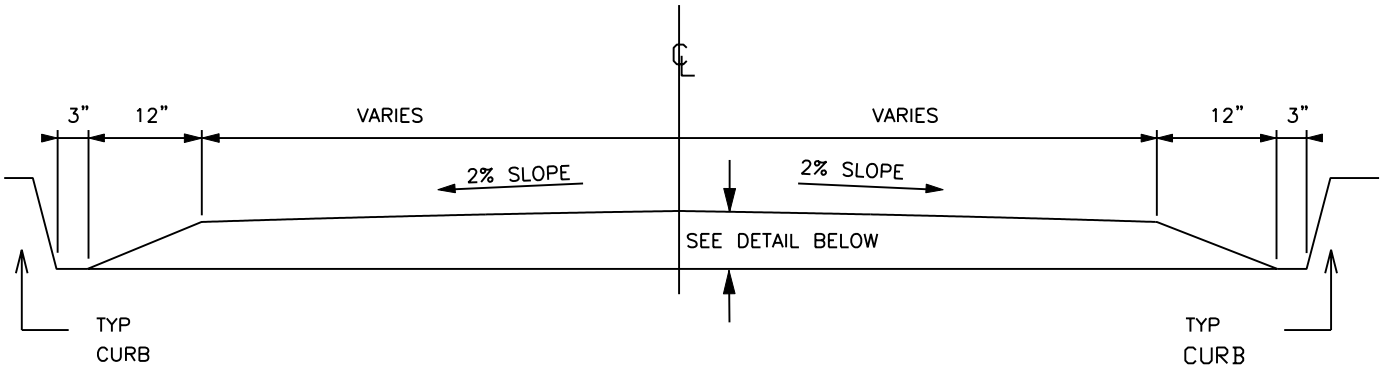

SPEED HUMP SECTION B-B

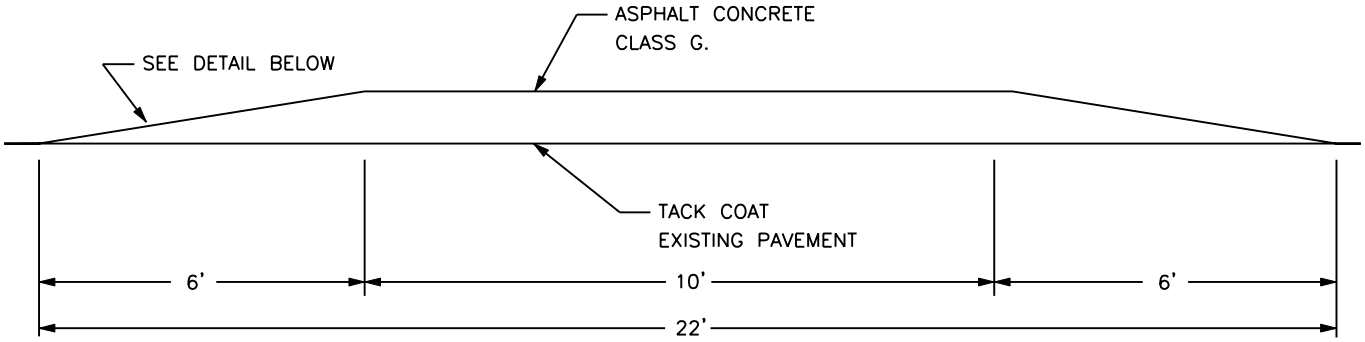

SPEED HUMP DETAIL (TYP)

COMPACTED DEPTHS – SEMINOLE SPEED HUMP

0	0.64	1.22	1.75	2.22	2.64	3.00	3.31	3.56	3.75	3.89	3.97	4.00"	← 4" SPEED HUMP
0	0.56	1.07	1.53	1.94	2.31	2.63	2.89	3.11	3.28	3.40	3.48	3.50"	← 3.5" SPEED HUMP
0	0.48	0.92	1.31	1.67	1.98	2.25	2.48	2.67	2.81	2.92	2.96	3.00"	← 3" SPEED HUMP

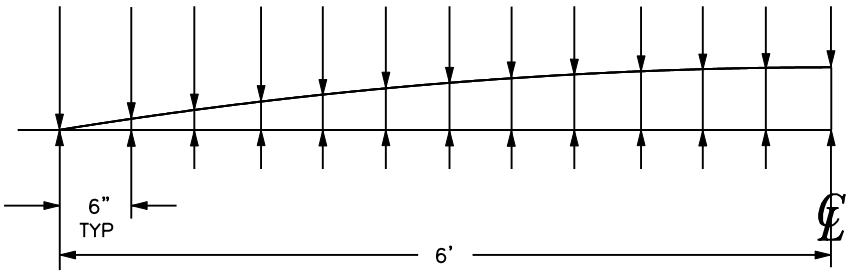

NOT TO SCALE

APPROVED: DAVID ALM	WILLIAM J. CAMPBELL STATE OF WASHINGTON 14817 REGISTERED PROFESSIONAL ENGINEER EXPIRES: 09-08-1998	THE CITY OF REDMOND WASHINGTON	STANDARD DETAILS
REV. DATE: JULY 31, 2000			**SEMINOLE SPEED HUMP (2 OF 2)**
TRANSPORTATION DIVISION			FILE SD428.DWG DRAWING NO. **428**