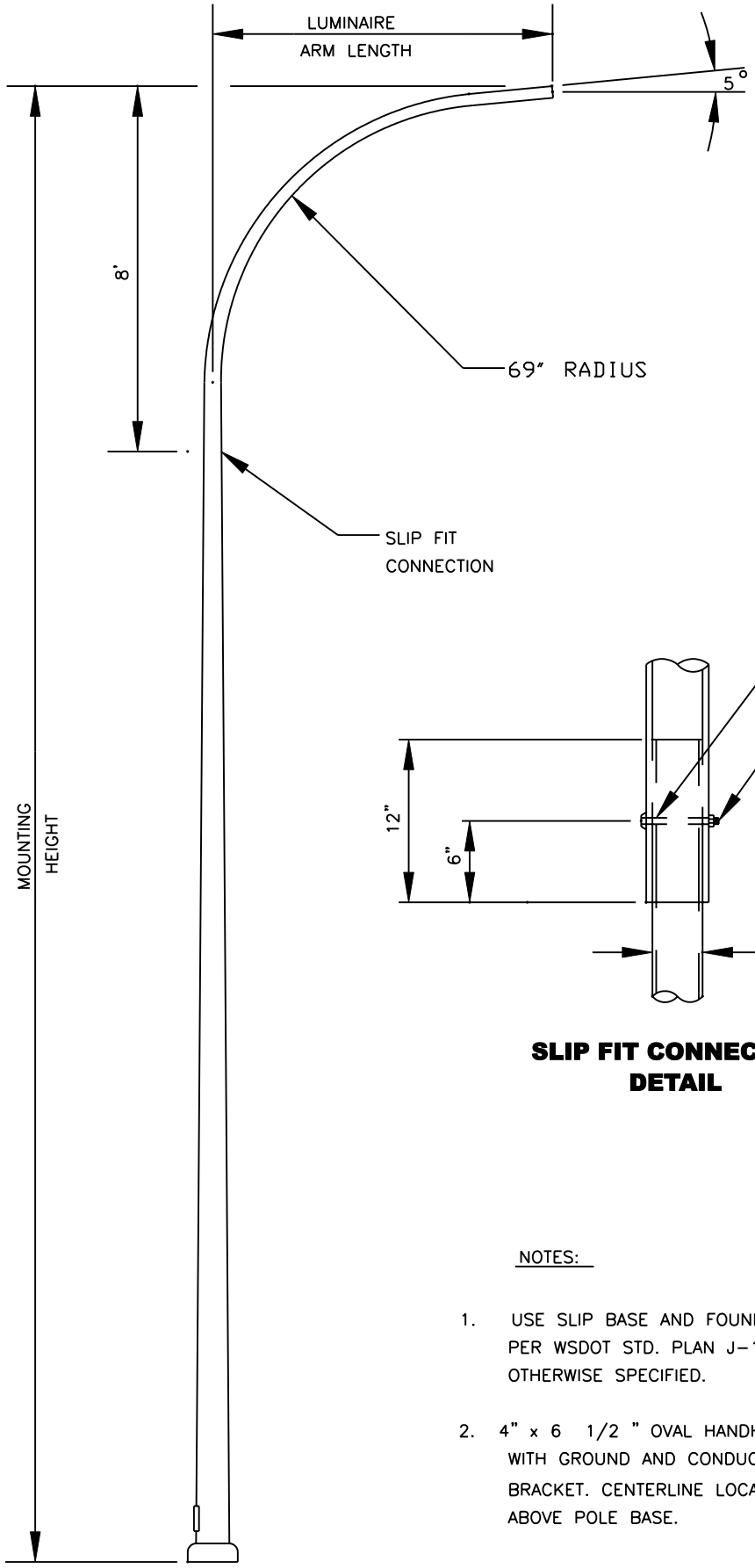

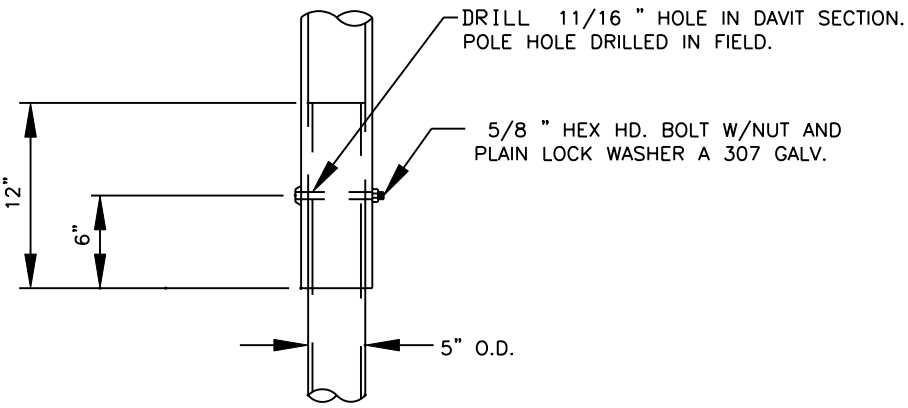

SLIP FIT CONNECTION DETAIL

NOTES:

1. USE SLIP BASE AND FOUNDATION DETAIL PER WSDOT STD. PLAN J-1b UNLESS OTHERWISE SPECIFIED.

2. 4" x 6 1/2 " OVAL HANDHOLE RIM AND COVER WITH GROUND AND CONDUCTOR ATTACHMENT BRACKET. CENTERLINE LOCATED AT 11" ABOVE POLE BASE.

APPROVED: DAVID ALM REV. DATE: AUGUST 31, 2000	WILLIAM J. CAMPBELL STATE OF WASHINGTON 14817 REGISTERED PROFESSIONAL ENGINEER EXPIRES: 9-08-1998	THE CITY OF REDMOND WASHINGTON	STANDARD DETAILS **"J" SERIES LIGHT STANDARD**
TRANSPORTATION DIVISION			FILE SD425.DWG DRAWING NO. **425**