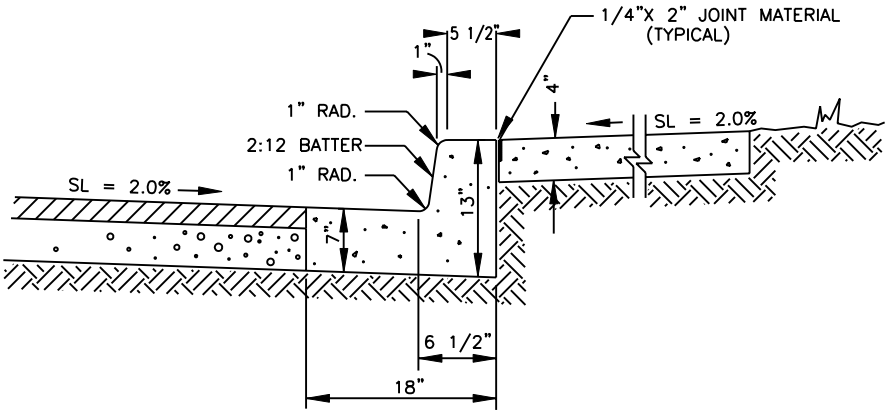

TYPE "A" CURB AND GUTTER SECTION

NO SCALE

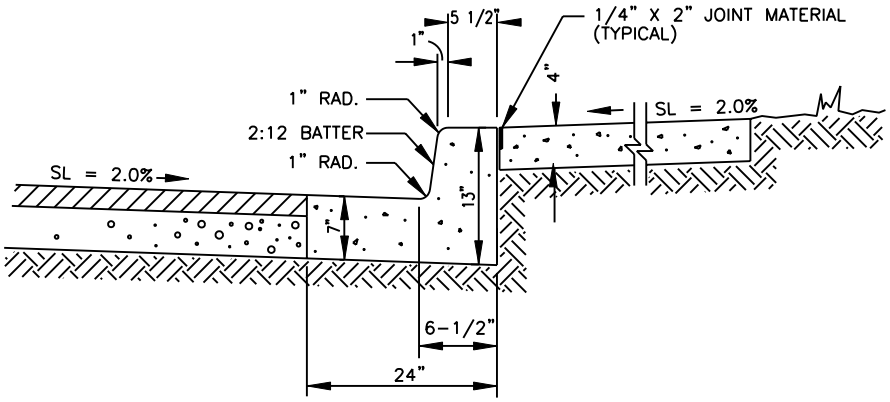

TYPE "A-1" CURB AND GUTTER SECTION

NO SCALE

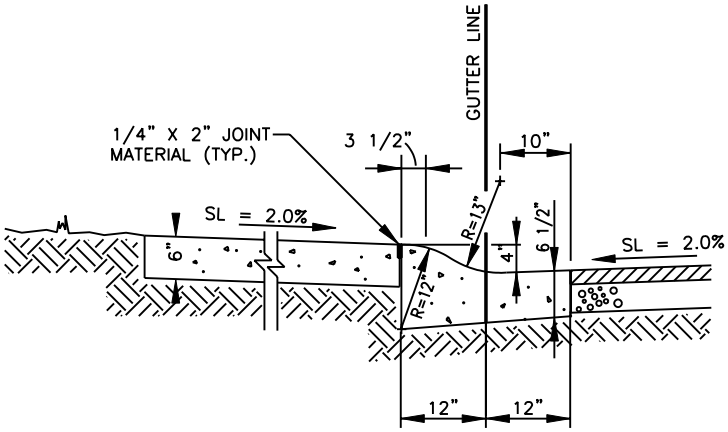

ROLLED CURB AND GUTTER SECTION

NO SCALE

NOTE: CONCRETE SHALL BE AIR ENTRAINED CLASS 3000

APPROVED: RICHARD H. BARTHOL	WILLIAM J CAMPBELL, STATE OF WASHINGTON, 14817, REGISTERED PROFESSIONAL ENGINEER, EXPIRES: 09-08-1998	THE CITY OF REDMOND WASHINGTON	STANDARD DETAILS
REV. DATE: JULY 1, 2000			**TYPICAL CURB AND GUTTER DETAILS**
ENGINEERING DIVISION			FILE SD304.DWG DRAWING NO. **304**