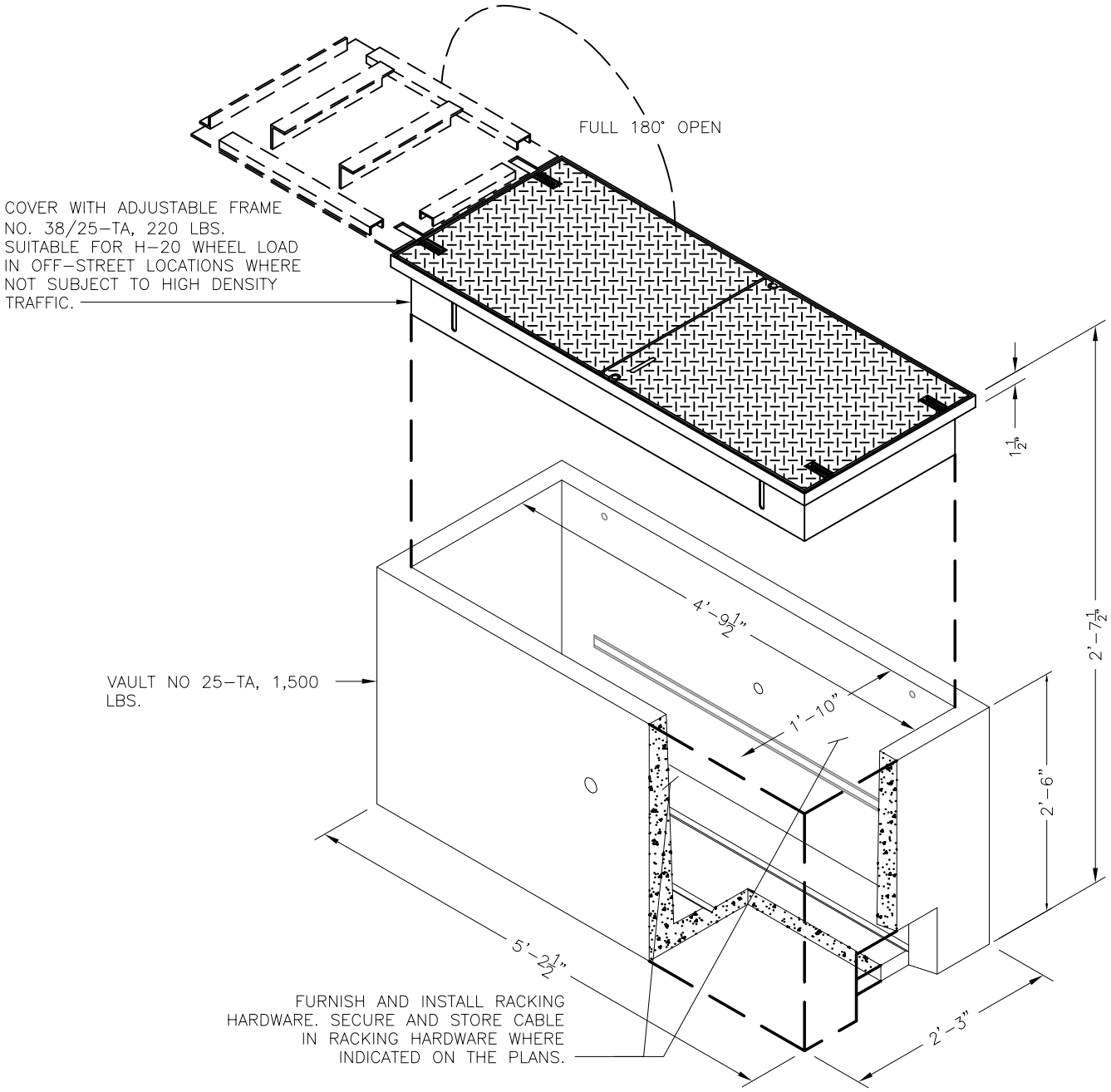

25-TA VAULT

NO SCALE

APPROVED: WILLIAM J. CAMPBELL	WILLIAM J. CAMPBELL STATE OF WASHINGTON 14817 REGISTERED PROFESSIONAL ENGINEER EXPIRES: 09-08-2008	CityofRedmond WASHINGTON	STANDARD DETAILS
REV. DATE: JULY 1, 2007			**FIBER SPLICE AND STORAGE DETAILS 3 OF 3**
			FILE SD468C DRAWING NO. **468C**