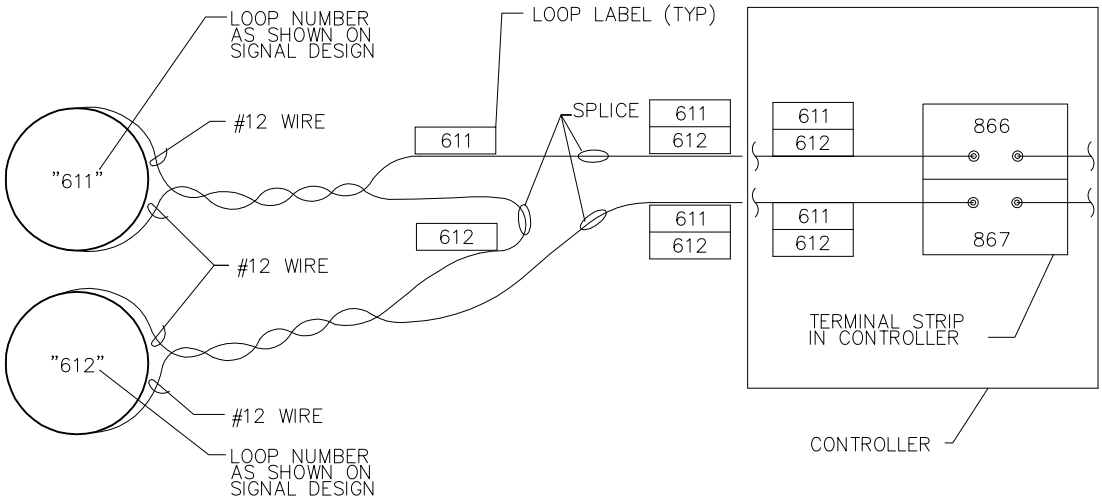

LOOP WIRE LABELLING DETAIL

NO SCALE

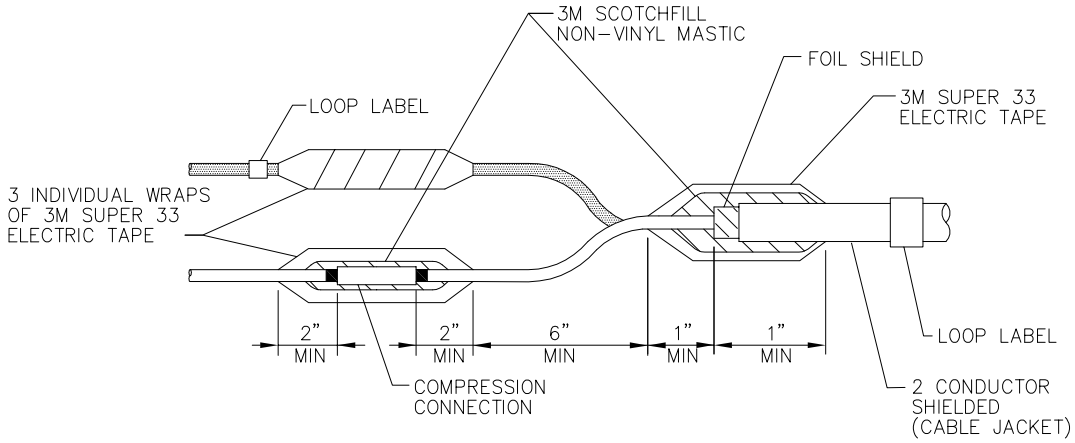

LOOP SPLICE DETAIL

NO SCALE

APPROVED: WILLIAM J. CAMPBELL	WILLIAM J. CAMPBELL STATE OF WASHINGTON 14817 REGISTERED PROFESSIONAL ENGINEER EXPIRES: 09-08-2008	City of Redmond WASHINGTON	STANDARD DETAILS
REV. DATE: JULY 1, 2007			**LOOP DETECTOR SPLICE AND WIRING LABELING**
			FILE SD457 DRAWING NO. **457**