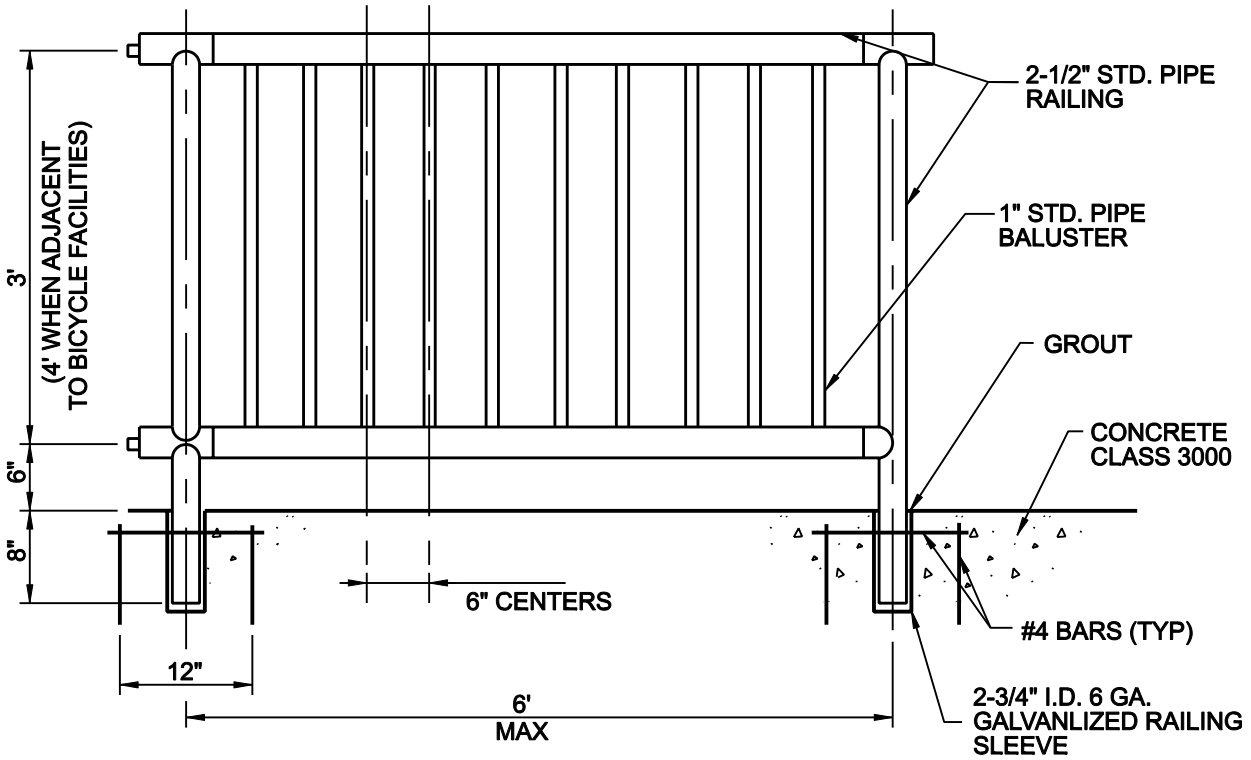

PEDESTRIAN RAILING DETAIL

NO SCALE

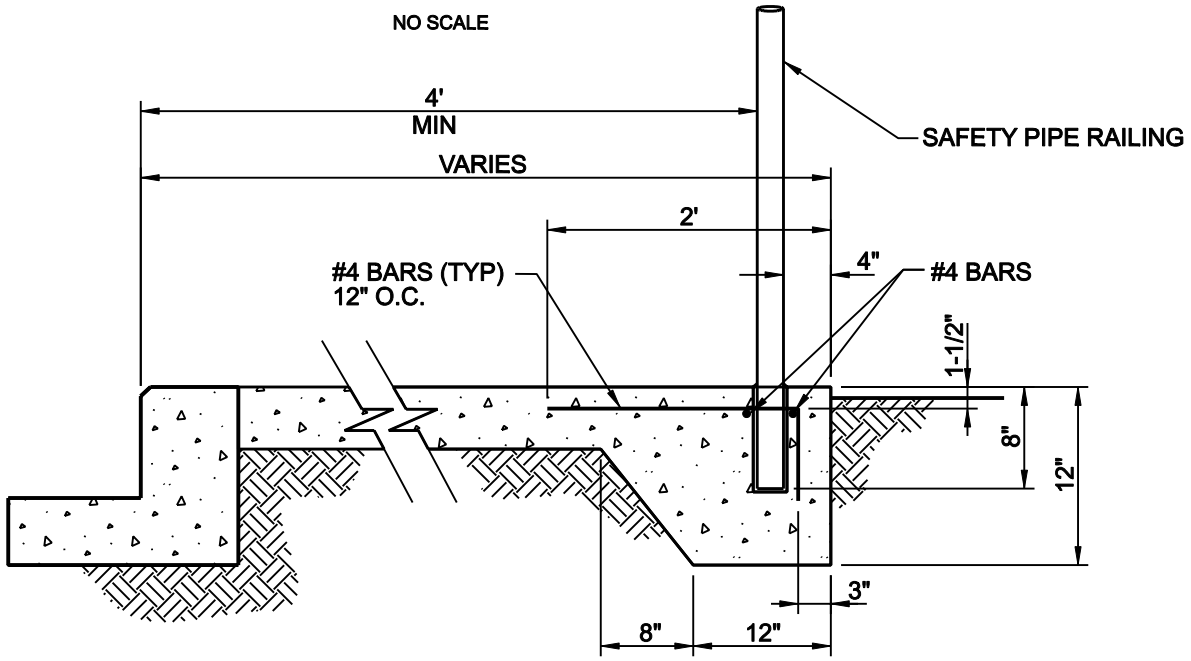

FOUNDATION RAILING DETAIL

NO SCALE

NOTES:

1. PIPES SHALL BE ALUMINUM AND MEET ASTM B241/B241M-02 OR B429-02 ALLOY 6063-T6 SCHEDULE 40 (STD. PIPE)

2. ALL ALUMINUM PARTS SHALL BE GIVEN A BRONZE ANODIC COATING AT LEAST 0.0006 INCH THICK AND HOT WATER SEALED AND SHALL HAVE A UNIFORM FINISH.

APPROVED: DON CAIRNS	WILLIAM J. CAMPBELL, STATE OF WASHINGTON, 14817, REGISTERED PROFESSIONAL ENGINEER, EXPIRES: 09-08-2006	THE CITY OF REDMOND WASHINGTON	STANDARD DETAILS
REV. DATE: NOVEMBER 01, 2005			TYPICAL PEDESTRIAN RAILING
TRANSPORTATION DIVISION			FILE: SD321.DGN · DRAWING NO. 321