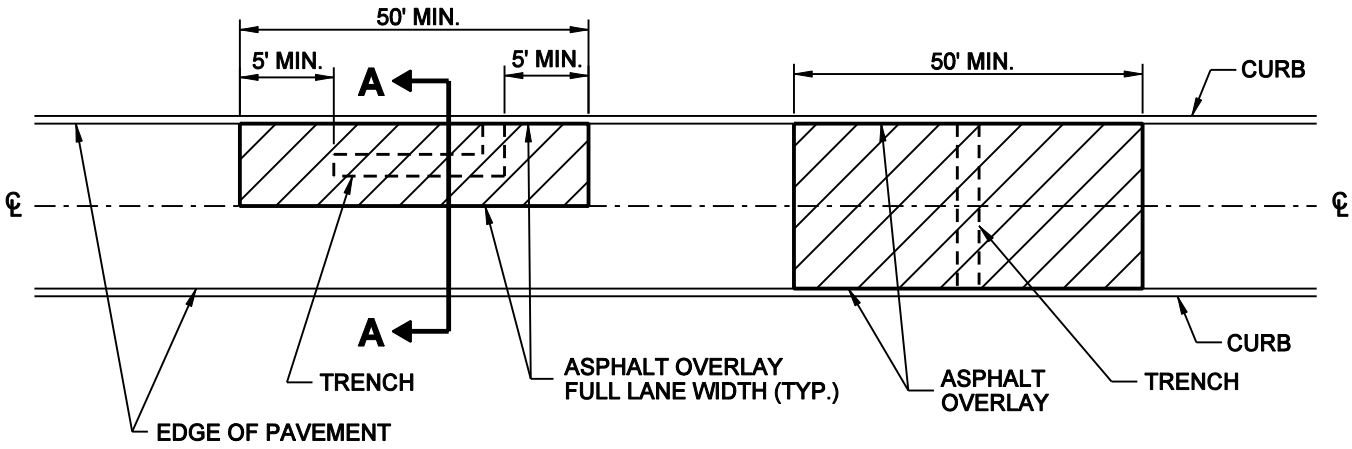

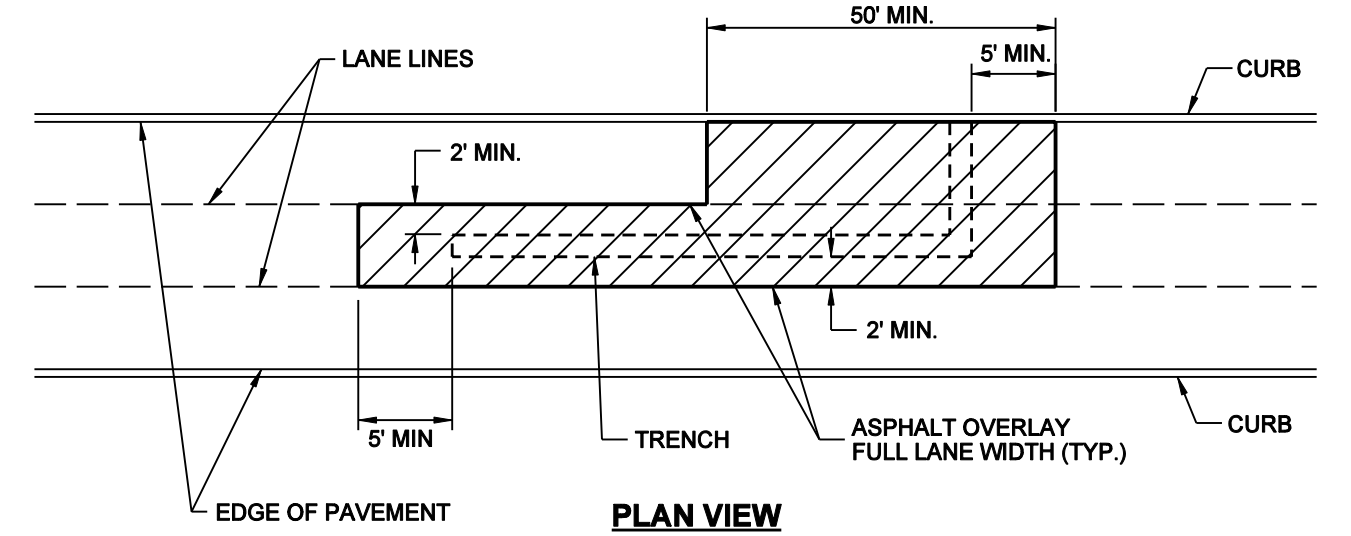

PLAN VIEW

NO SCALE

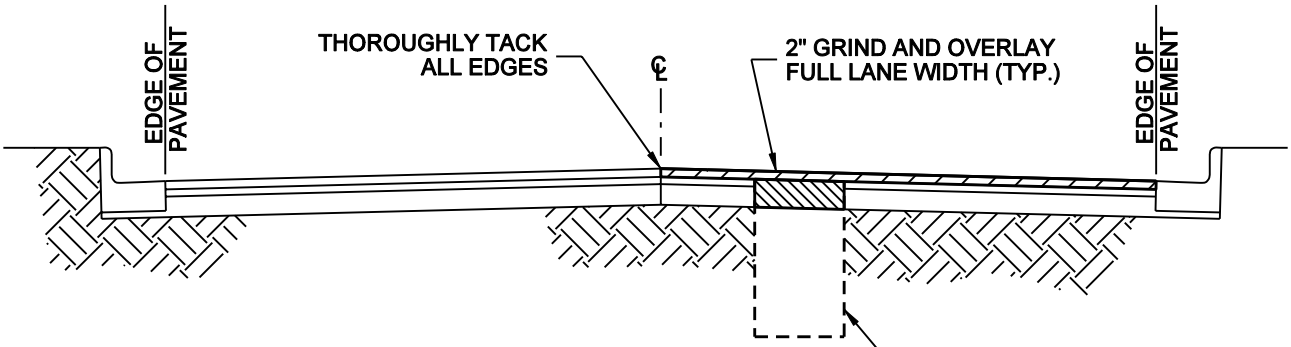

SECTION A-A

NO SCALE

TRENCH
SEE STANDARD
DETAIL 201

NOTES:

1. THIS STANDARD APPLIES TO ALL CUTS TO ARTERIAL STREETS AND ALL PAVEMENT LESS THAN FIVE YEARS OLD.
2. OVERLAY AREA MAY BE MODIFIED BY CITY ON OLDER PAVEMENT DEPENDING ON CONDITIONS OR SCHEDULED CONSTRUCTION / MAINTENANCE.
3. ADJUST ALL UTILITY CASTING TO FINISH GRADE AND RESTORE CHANNELIZATION AND LOOP DETECTORS.

APPROVED: DON CAIRNS	WILLIAM J. CAMPBELL, STATE OF WASHINGTON, 14817, REGISTERED PROFESSIONAL ENGINEER, EXPIRES: 09-08-2006	THE CITY OF REDMOND WASHINGTON	STANDARD DETAILS
REV. DATE: NOVEMBER 01, 2005			**ASPHALT OVERLAY FOR ROADWAY TRENCH REPAIR**
TRANSPORTATION DIVISION			FILE: SD202.DGN · DRAWING NO. 202